GENERAL INFORMATION
3RD ANGLE PROJECTION
DO NOT SCALE - IF IN DOUBT, ASK
REMOVE ALL SHARP EDGES AND BURRS

Metal & Glass Ltd shall bear no liability for failure to comply with the applicable laws, building codes and safety requirements by the user of the product, architect, installer or owner of the building

ENVIRONMENT CATEGORY - C5

ITEM NO.	PART NUMBER	DESCRIPTION	QTY.
1	MGL1052A	STELLA BESPOKE OPENING CONSERVATION ROOFLIGHT	1

NOTES:
INSTALLER TO PROVIDE ADEQUATE FITTING ALLOWANCE TO ALL SIDES OF ROOF FRAMING TO ENSURE EASE OF INSTALLATION.
DESIGN & CONSTRUCTION OF ROOF FRAMING TO BE APPROVED BY CLIENTS STRUCTURAL ENGINEER
ROOFLIGHT TO BE SUPPLIED FULLY GLAZED

TOLERANCES UNLESS OTHERWISE SPECIFIED	
LINEAR - 0 DECIMAL PLACES	±1.0mm
LINEAR - 1 DECIMAL PLACES	±0.50mm
LINEAR - 2 DECIMAL PLACES	±0.15mm
ANGULAR	±1.0°
SURFACE FINISH - GENERAL	3.2 µm
SURFACE FINISH - MACHINED	1.6 µm
SURFACE FINISH - GROUND	0.4 µm
SURFACE FINISH - POLISHED	0.2 µm
SCREW THREAD - INTERNAL	6H
SCREW THREAD - EXTERNAL	6g

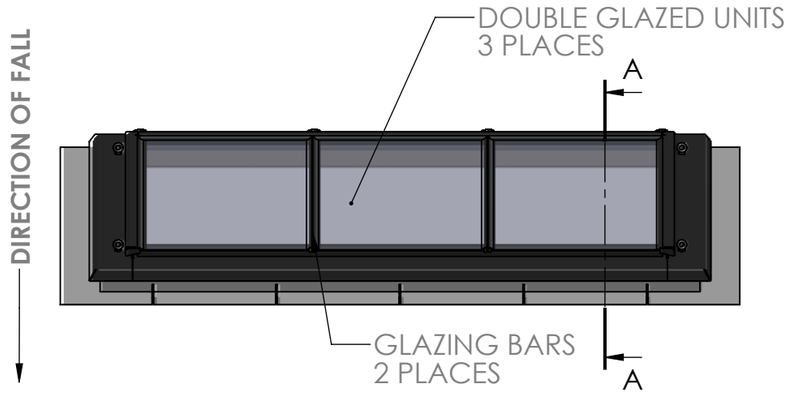

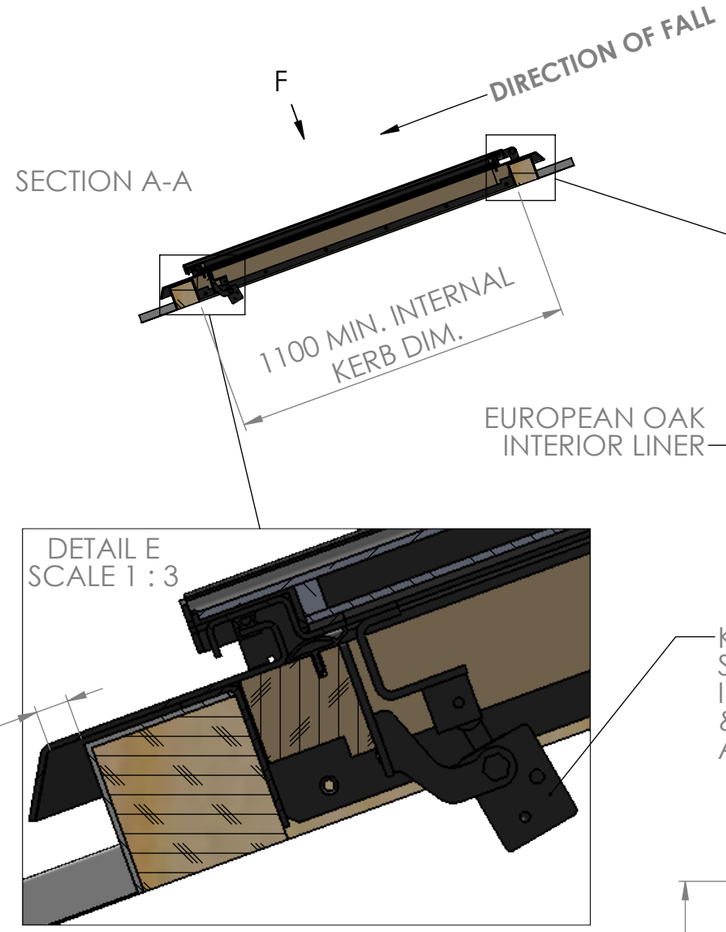

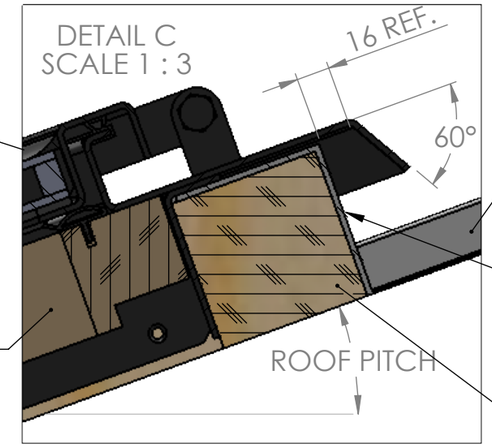

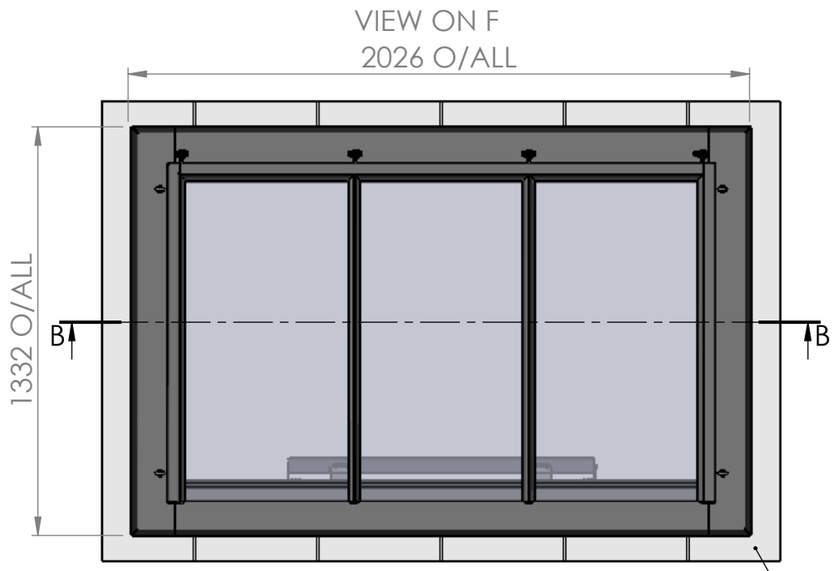

KA66-TW065 24v DC 350mm STROKE ELECTRIC ACTUATOR INCLUDING CONTROL PANEL & RAIN SENSOR - FINISH ANTHRACITE GREY

APPLY GENEROUS ZIG ZAG BEAD OF SUITABLE SEALANT BETWEEN MATING FACES ON ASSEMBLY

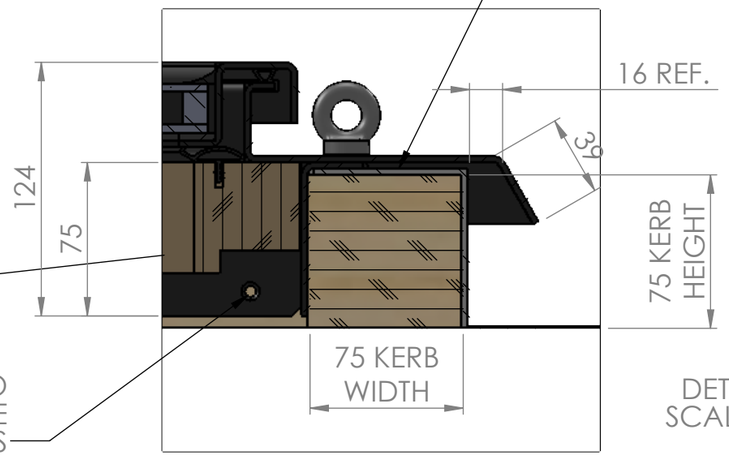

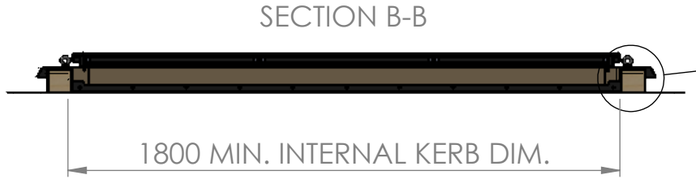

FULL LENGTH FIXING ANGLES TO ALL SIDES OF ROOFLIGHT COMPLETE WITH CSK SCREW FIXING HOLES

STELLA ROOFLIGHT

THE INFORMATION CONTAINED IN THIS DRAWING IS THE SOLE PROPERTY OF METAL & GLASS LTD. ANY REPRODUCTION IN PART OR AS A WHOLE WITHOUT WRITTEN PERMISSION IS STRICTLY PROHIBITED

SHEET: 1 OF 3 - A3
DATE: 08/05/21 UNITS: mm; kg

DRAWN: S.C
SCALE: 1:20
WEIGHT: 113

TITLE: BESPOKE OPENING CONSERVATION ROOFLIGHT GA

REF: Metal Roof Design

MATERIAL: 316 ST STEEL
SEALS/SEALANT COLOUR: BLACK/BLACK
FINISH: SWEEP BLAST & POWDER COAT PZ790 SYSTEM RAL7016 ANTHRACITE GREY

PART TYPE: MANUFACTURED
PART REF: MGL1051A
DRG. No. MGL01051A ISSUE: 1

GENERAL INFORMATION
3RD ANGLE PROJECTION
DO NOT SCALE - IF IN DOUBT, ASK
REMOVE ALL SHARP EDGES AND BURRS

Metal & Glass Ltd shall bear no liability for failure to comply with the applicable laws, building codes and safety requirements by the user of the product, architect, installer or owner of the building

TOLERANCES UNLESS OTHERWISE SPECIFIED	
LINEAR - 0 DECIMAL PLACES	±1.0mm
LINEAR - 1 DECIMAL PLACES	±0.50mm
LINEAR - 2 DECIMAL PLACES	±0.15mm
ANGULAR	±1.0°
SURFACE FINISH - GENERAL	3.2 µm
SURFACE FINISH - MACHINED	1.6 µm
SURFACE FINISH - GROUND	0.4 µm
SURFACE FINISH - POLISHED	0.2 µm
SCREW THREAD - INTERNAL	6H
SCREW THREAD - EXTERNAL	6g

GLAZING SPECIFICATION:
(TO BE APPROVED BY CLIENTS STRUCTURAL ENGINEER)
4mm TOUGHENED BIO CLEAN NATURA SELF-CLEAN/SOLAR CONTROL
16mm BLACK WARM EDGE SPACER (ARGON GAS)
4mm TOUGHENED PLANITHERM ONE LOW E

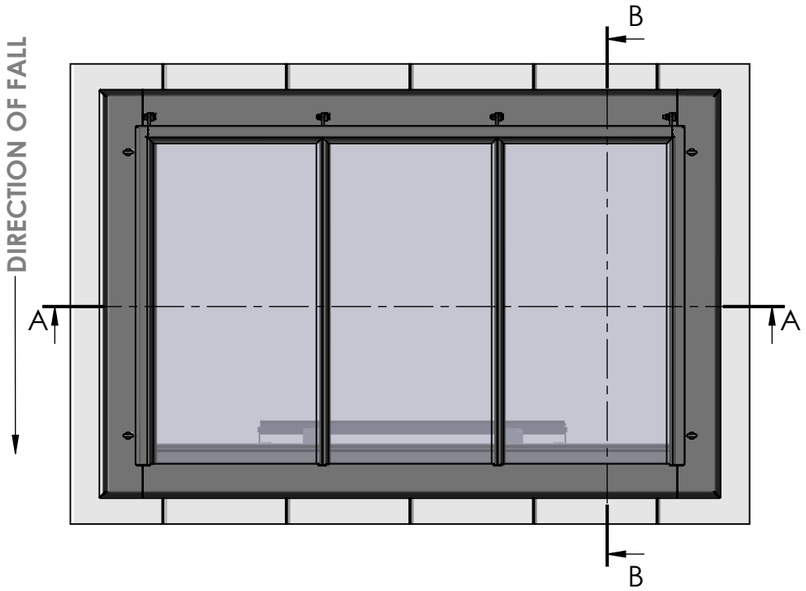

SECTION B-B
SCALE 1 : 5

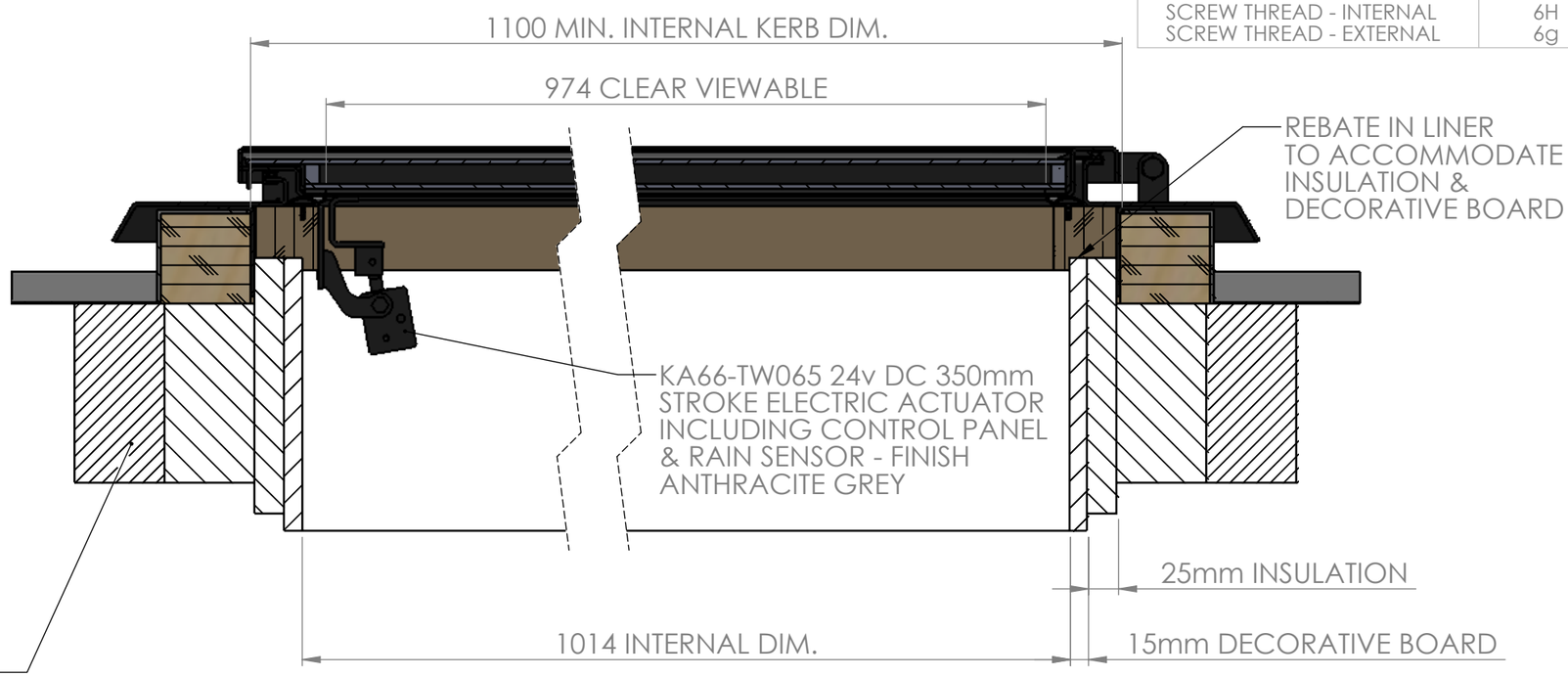

UPSTAND/ROOF FRAMING DESIGN & CONSTRUCTION TO BE APPROVED BY CLIENTS STRUCTURAL ENGINEER

REMOVABLE M12 EYEBOLT TO AID LIFTING OPERATION 4 PLACES

UPSTAND/ROOF FRAMING DESIGN & CONSTRUCTION TO BE APPROVED BY CLIENTS STRUCTURAL ENGINEER

SECTION A-A
SCALE 1 : 5

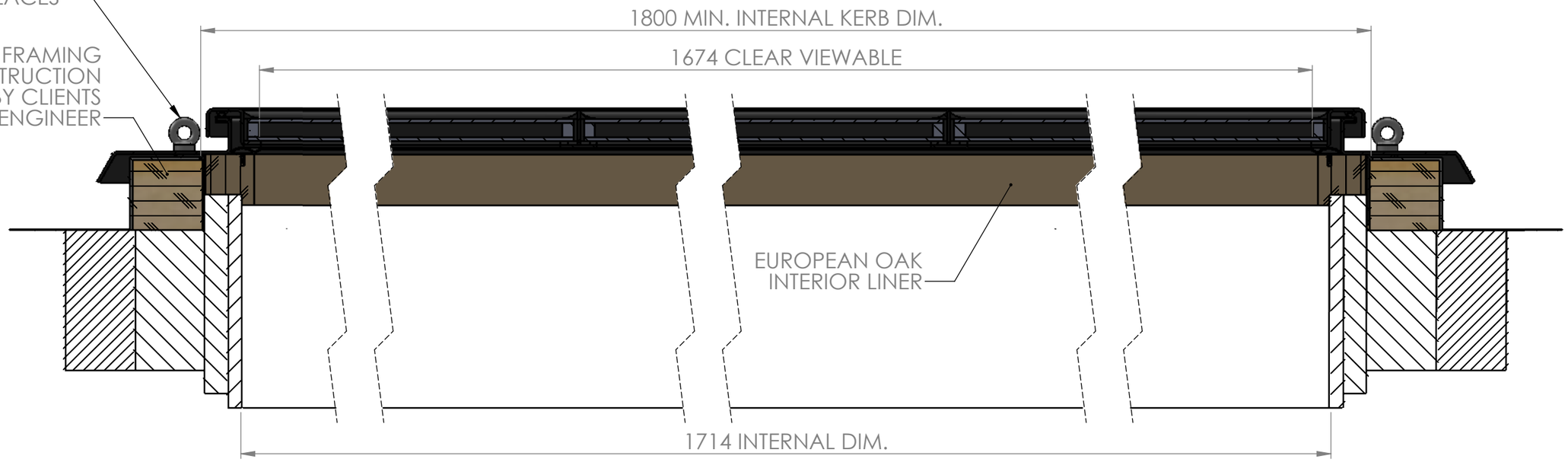

STELLA ROOFLIGHT

THE INFORMATION CONTAINED IN THIS DRAWING IS THE SOLE PROPERTY OF METAL & GLASS LTD. ANY REPRODUCTION IN PART OR AS A WHOLE WITHOUT WRITTEN PERMISSION IS STRICTLY PROHIBITED

SHEET: 2 OF 3 - A3
DATE: 08/05/21
UNITS: mm; kg

DRAWN: S.C
SCALE: 1:20
WEIGHT: 113

TITLE: BESPOKE OPENING CONSERVATION ROOFLIGHT GA

REF: Metal Roof Design

MATERIAL: 316 ST STEEL
SEALS/SEALANT COLOUR: BLACK/BLACK
FINISH: SWEEP BLAST & POWDER COAT PZ790 SYSTEM RAL7016 ANTHRACITE GREY

PART TYPE: MANUFACTURED
PART REF: MGL1051A
DRG. No. MGL01051A
ISSUE: 1

GENERAL INFORMATION
3RD ANGLE PROJECTION
DO NOT SCALE - IF IN DOUBT, ASK
REMOVE ALL SHARP EDGES AND BURRS

Metal & Glass Ltd shall bear no liability for failure to comply with the applicable laws, building codes and safety requirements by the user of the product, architect, installer or owner of the building

TOLERANCES UNLESS OTHERWISE SPECIFIED	
LINEAR - 0 DECIMAL PLACES	±1.0mm
LINEAR - 1 DECIMAL PLACES	±0.50mm
LINEAR - 2 DECIMAL PLACES	±0.15mm
ANGULAR	±1.0°
SURFACE FINISH - GENERAL	3.2 µm
SURFACE FINISH - MACHINED	1.6 µm
SURFACE FINISH - GROUND	0.4 µm
SURFACE FINISH - POLISHED	0.2 µm
SCREW THREAD - INTERNAL	6H
SCREW THREAD - EXTERNAL	6g

ROOFLIGHT SHOWN IN FULLY OPEN POSITION

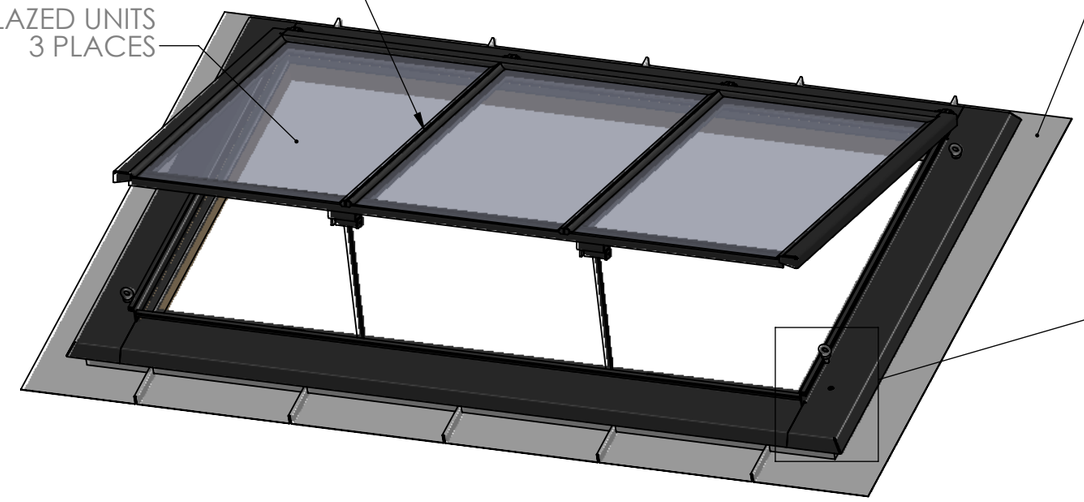

DETAIL G
SCALE 1 : 5

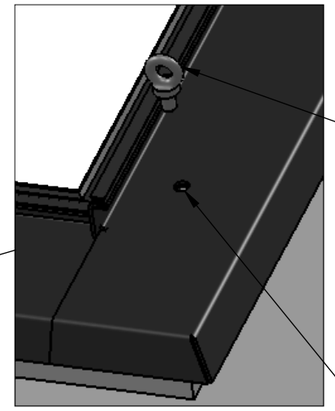

REMOVABLE M12 EYEBOLT TO AID LIFTIING OPERATION 4 PLACES.
NOTE:
EYEBOLT TO BE SCREWED TIGHT AGAINST FLANGE BEFORE COMMENCING LIFTING OPERATIONS

REMOVE EYEBOLT AFTER INSTALLATION & SEAL HOLE USING SILICONE SEALANT & M12x20 BUTTON HEAD SCREW 4 PLACES

ROOFLIGHT SHOWN IN FULLY CLOSED POSITION

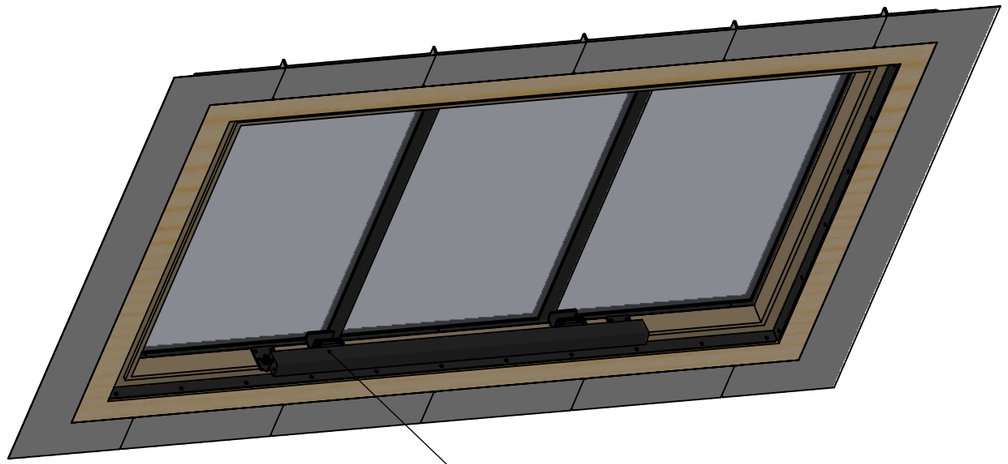

KA66-TW065 24v DC 350mm STROKE ELECTRIC ACTUATOR INCLUDING CONTROL PANEL & RAIN SENSOR - FINISH ANTHRACITE GREY

STELLA ROOFLIGHT

THE INFORMATION CONTAINED IN THIS DRAWING IS THE SOLE PROPERTY OF METAL & GLASS LTD. ANY REPRODUCTION IN PART OR AS A WHOLE WITHOUT WRITTEN PERMISSION IS STRICTLY PROHIBITED

SHEET: 3 OF 3 - A3

DATE: 08/05/21 | UNITS: mm; kg

DRAWN: S.C
SCALE: 1:15
WEIGHT: 113

TITLE: BESPOKE OPENING CONSERVATION ROOFLIGHT GA

REF: Metal Roof Design

MATERIAL: 316 ST STEEL
SEALS/SEALANT COLOUR: BLACK/BLACK
FINISH: SWEEP BLAST & POWDER COAT PZ790 SYSTEM RAL7016 ANTHRACITE GREY

PART TYPE: MANUFACTURED
PART REF: MGL1051A

DRG. No. MGL01051A | ISSUE: 1